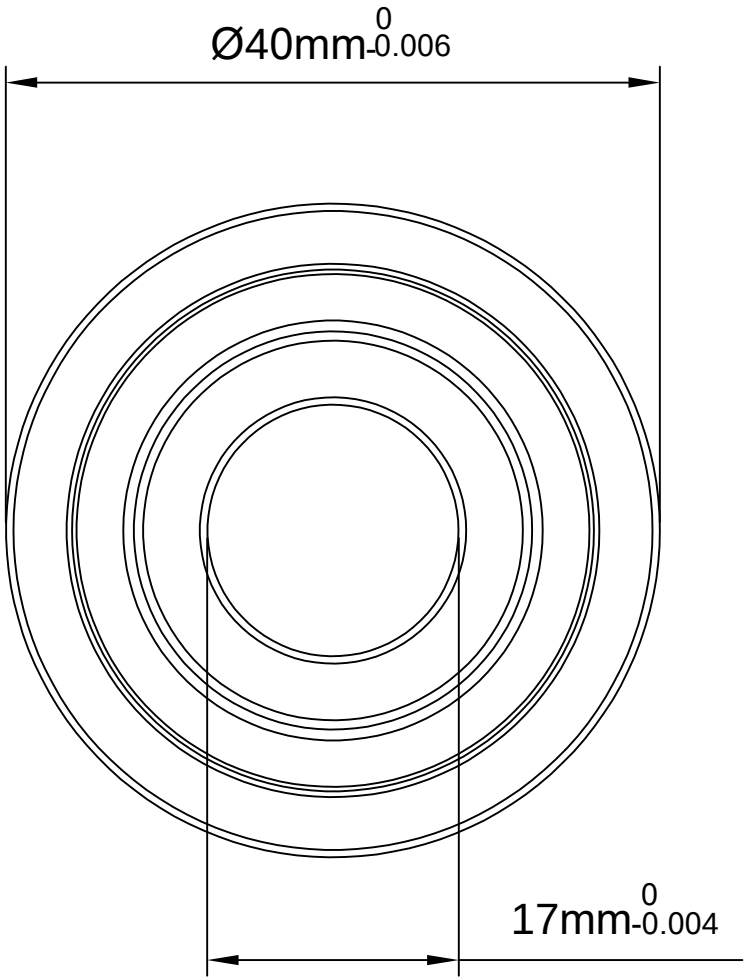

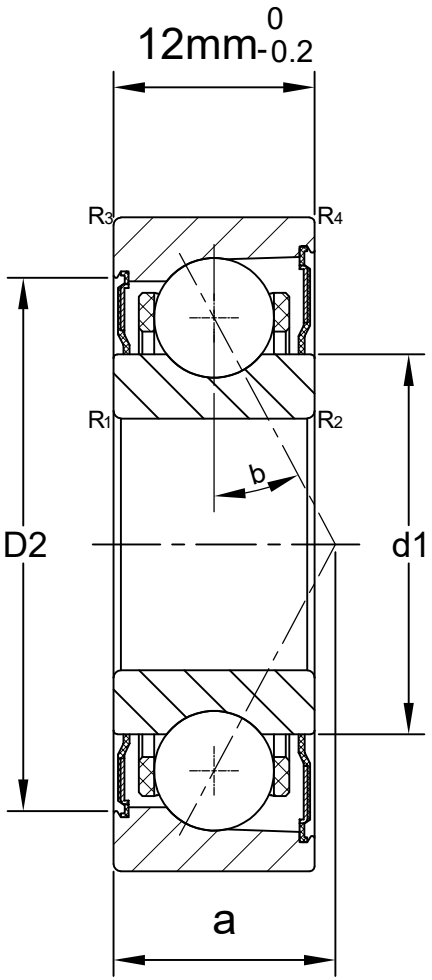

LILY BEARING

b:	15°		Contact Angle
$R_{3,4}$:	min 0.3	mm	Chamfer Dimension
$R_{1,2}$:	min 0.6	mm	Chamfer Dimension
D2:	34.4	mm	Shoulder Dia Of Outer Ring
d1:	24.1	mm	Shoulder Dia Of inner Ring
a:	9.9	mm	Distance From Side Face To Pressure Point

LILY®	SHANGHAI LILY BEARING LIMITED Email: lilybearing@lily-bearing.com
Part Number	S7203 CD/HCP4A Angular Contact Ball Bearings