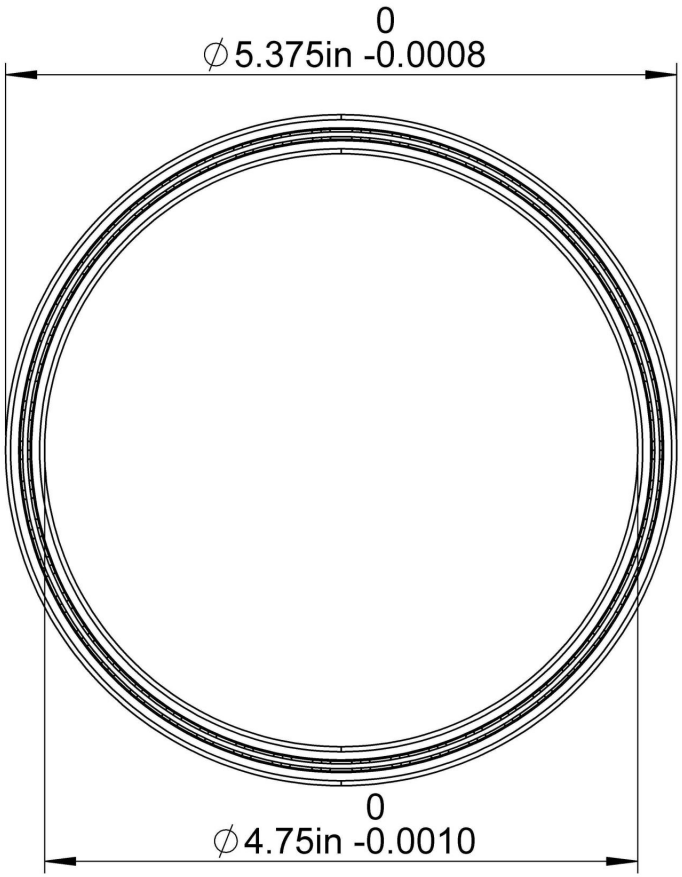

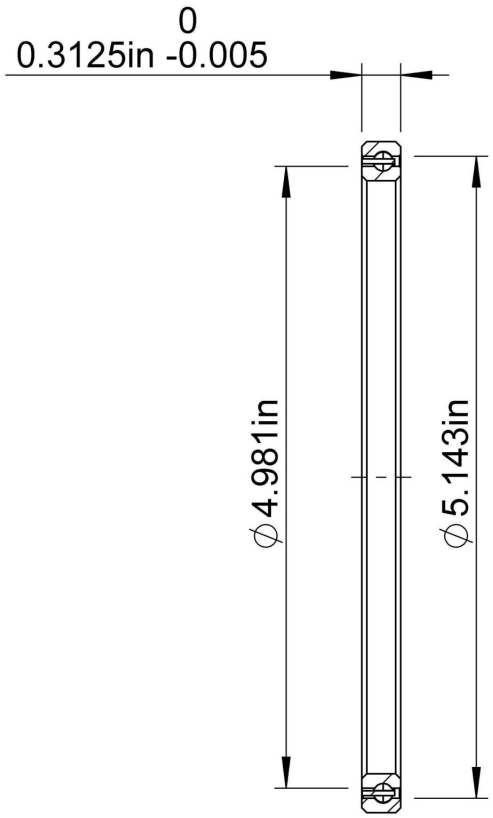

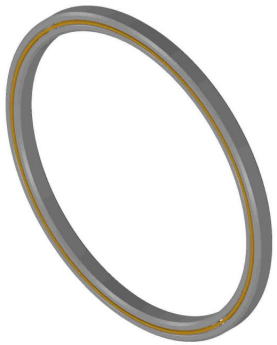

LILY®	SHANGHAI LILY BEARING LIMITED Email: lilybearing@lily-bearing.com
Part Number	NB047XP0 Thin Section Bearings Equivalent