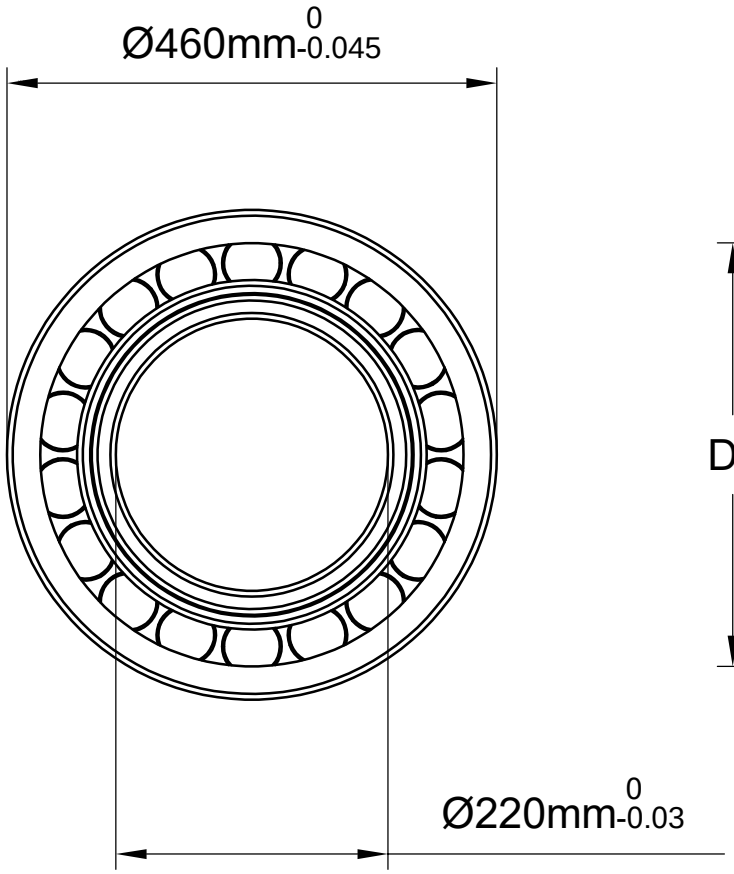

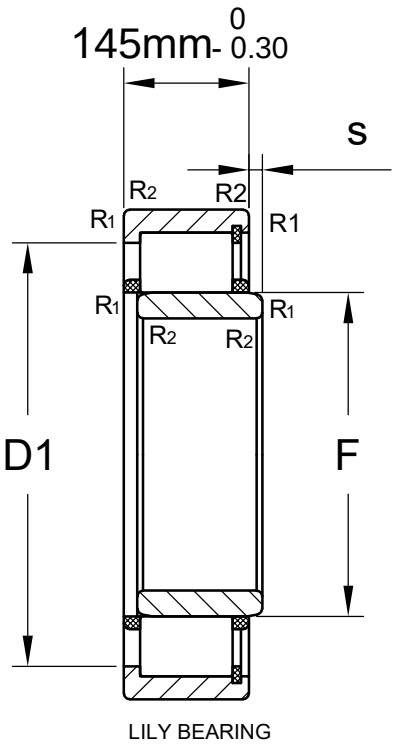

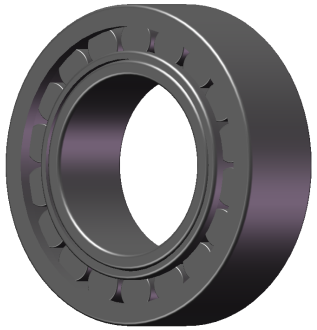

$R_{1,2}$:	min 5	mm	Chamfer Dimension
D1:	≈391.8	mm	Shoulder Diameter Outer Ring
F:	277	mm	Raceway Diameter Inner Ring
s:	max.3	mm	Permissible Axial Displacement From The Normal Position Of One Bearing Ring Relative To The Other

LILY®	SHANGHAI LILY BEARING LIMITED Email: lilybearing@lily-bearing.com
Part Number	NUH 2344 ECMH/PEX Cylindrical Roller Bearing