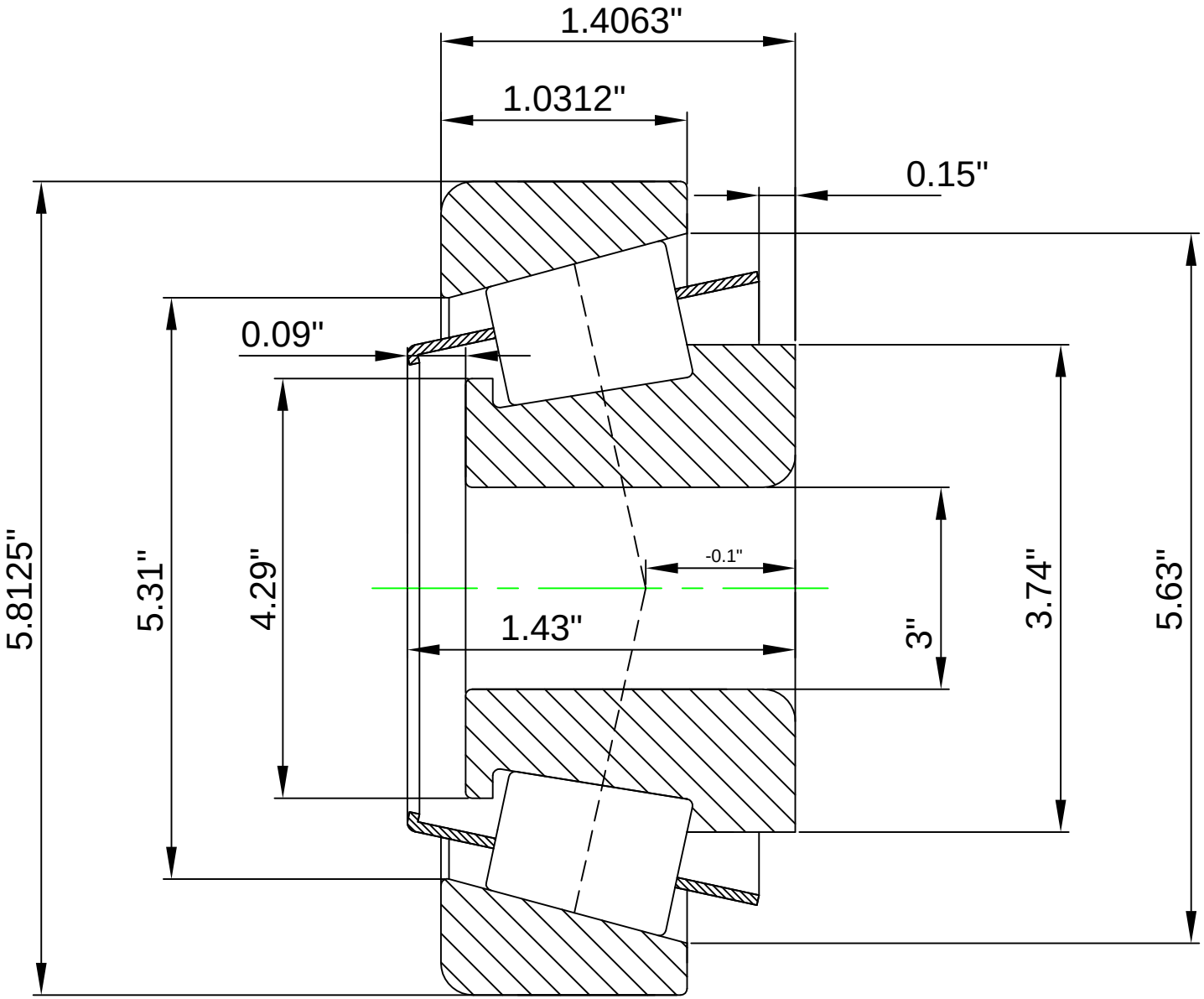

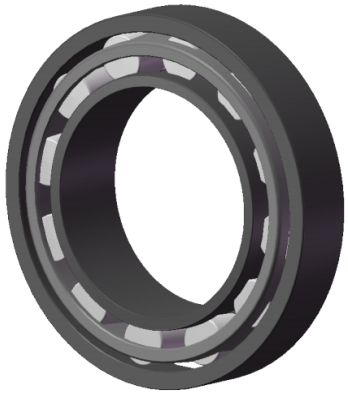

LILY®	SHANGHAI LILY BEARING LIMITED Email: lilybearing@lily-bearing.com
Part Number	TS SERIES 590A-592XE(Tapered Single Roller Bearings)