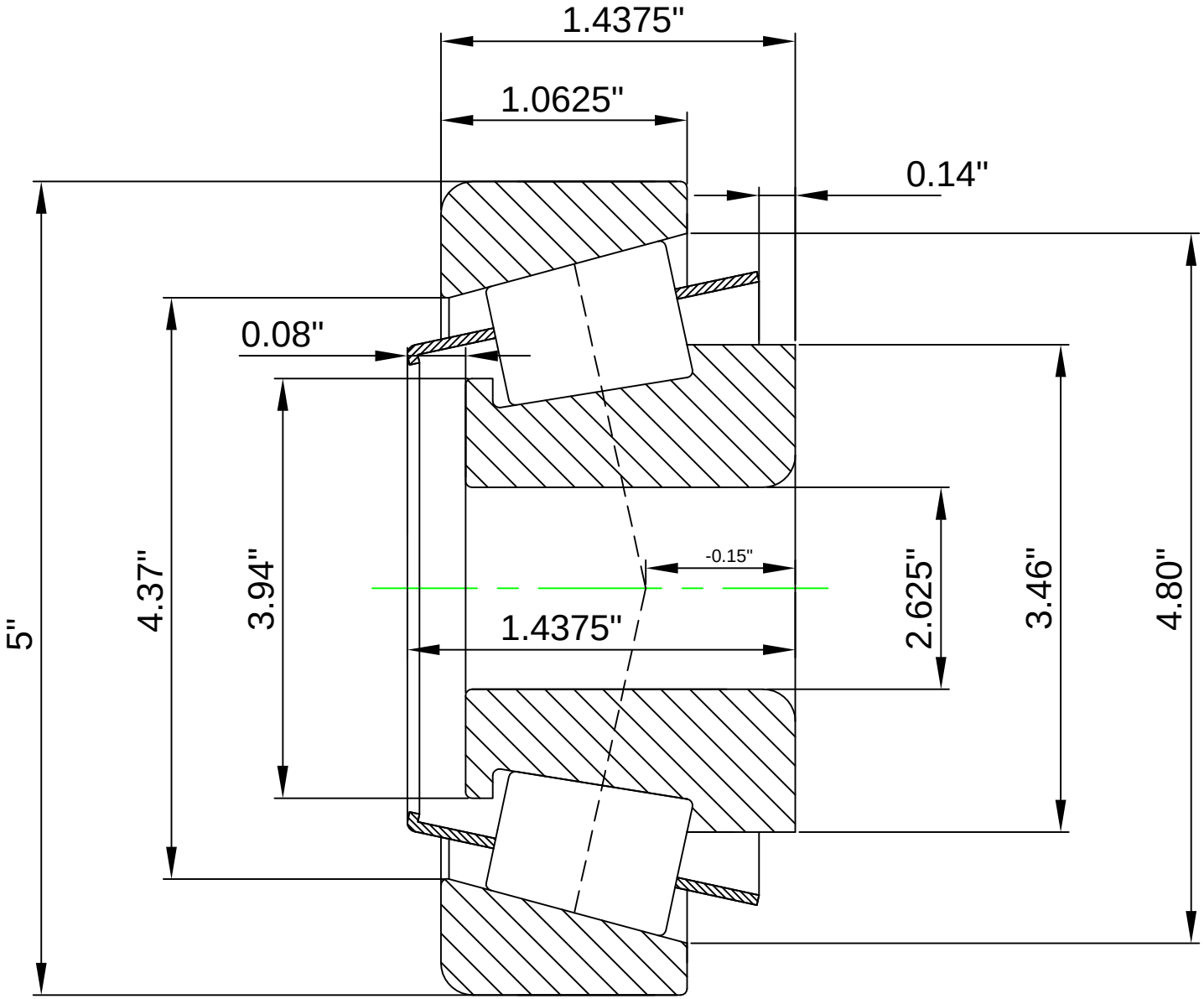

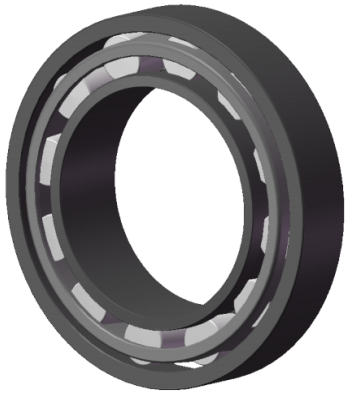

LILY®	SHANGHAI LILY BEARING LIMITED Email: lilybearing@lily-bearing.com
Part Number	TS SERIES HM813844-HM813810P(Tapered Single Roller Bearings)